DWG BY: LMARTINEZ 2934

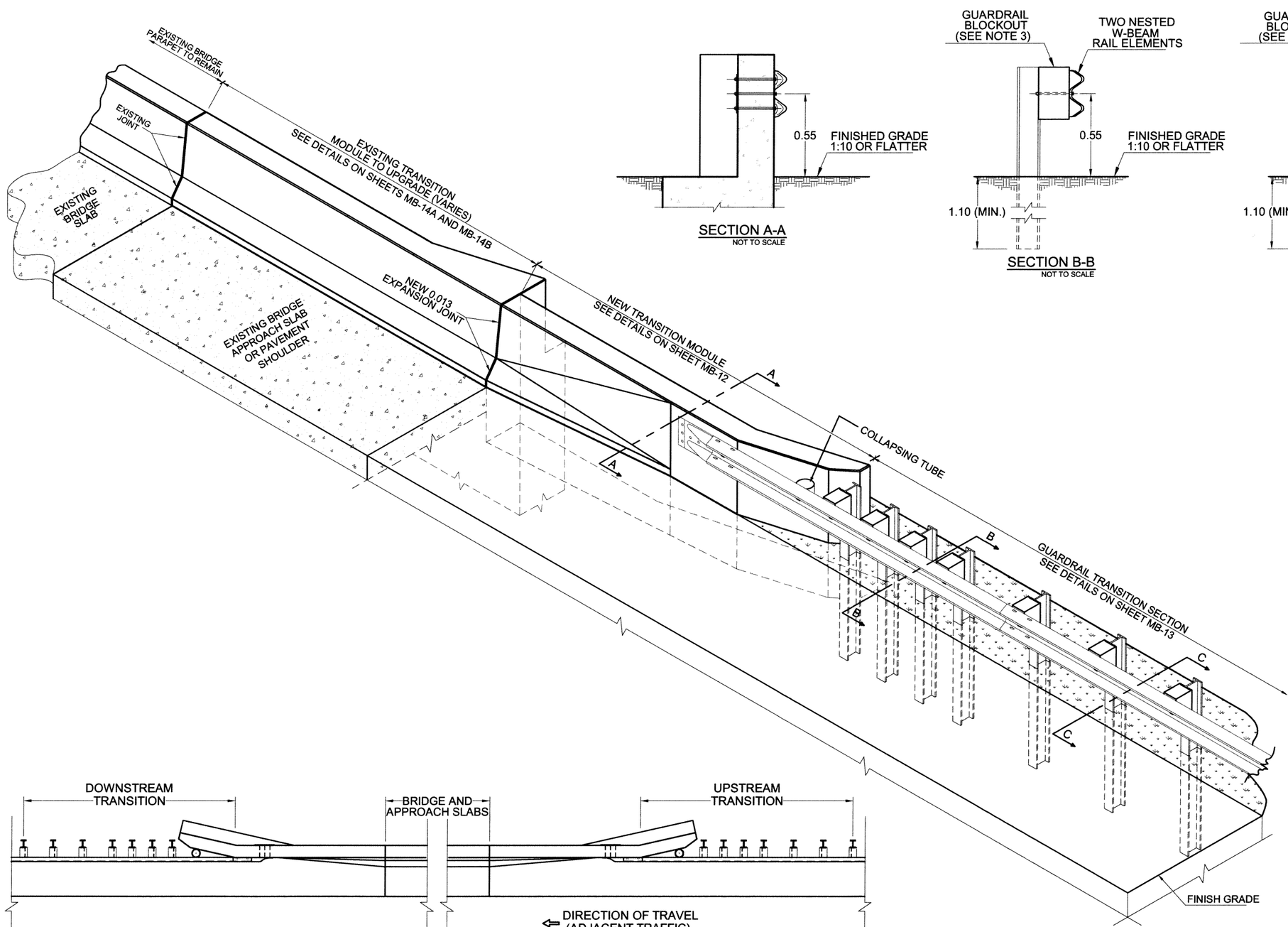

DEFINITION OF METAL BARRIER TRANSITION TO CONCRETE PARAPET
DETAIL
NOT TO SCALE

SECTION A-A
NOT TO SCALE

SECTION B-B
NOT TO SCALE

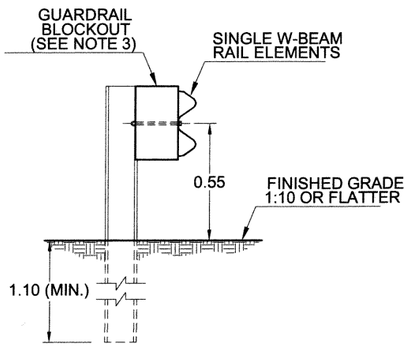

SECTION C-C
NOT TO SCALE

GENERAL NOTES:

1. ALL DIMENSIONS IN METERS UNLESS OTHERWISE SPECIFIED.
2. ALL NECESSARY HARDWARE FOR THE CONSTRUCTION OF THE TRANSITION SECTION SHALL BE A SUBSIDIARY OBLIGATION OF THE GUARDRAIL ITEM.
3. THE GUARDRAIL BLOCKOUT INSTALLATION SHALL BE AS PER GUARDRAIL POST ASSEMBLY DETAILS SHOWN IN STANDARD DRAWINGS FOR METAL BARRIERS.
4. BACK-UP PLATES SHALL BE INSTALLED WHEN METAL BLOCKOUTS ARE USED AS CALLED FOR IN THE CONTRACT DOCUMENTS.
5. THE APPROACH SLAB SHALL BE AS ESTABLISHED ON CONTRACT DOCUMENTS.
6. TRANSITION SECTION TO CONCRETE PARAPET SHALL BE APPLY FOR BOTH, DOWNSTREAM AND UPSTREAM CONCRETE PARAPET TRANSITION.
7. ON EVERY PARAPET SECTION WHERE CONDUITS EXIST, THE CONTRACTOR SHALL CONNECT AND EXTEND ALL OF THEM THRU THE NEW TRANSITION MODULE AS A SUBSIDIARY OBLIGATION.
8. THE CONCRETE SAFETY SHAPE DIMENSIONS OF THE EXISTING PARAPET SHALL BE USED AS GEOMETRY FOR THE UPGRADE OF THE EXISTING TRANSITION MODULE.

ENGINEERING STANDARDS OFFICE
ENGINEERING SERVICES AREA

DATE	REVISION	BY
SEPT. 09	ORIGINAL	

COMMONWEALTH OF PUERTO RICO DEPARTMENT OF TRANSPORTATION AND PUBLIC WORKS HIGHWAY AND TRANSPORTATION AUTHORITY	STANDARD DRAWING APPROVED BY: 23/11/09 DATE: DEPUTY EXECUTIVE DIRECTOR FOR INFRASTRUCTURE	METAL BARRIER W-BEAM STRONG POST TRANSITION SECTION TO CONCRETE PARAPET EXISTING BRIDGE TRANSITION UPGRADE	MB-14 SEPTEMBER 2009