DWG BY: LMARTINEZ 2934

REVISION	DATE	BY

REVISION	DATE	BY

REVISION	DATE	BY

REVISION	DATE	BY

REVISION	DATE	BY
ORIGINAL	SEPT. 09	

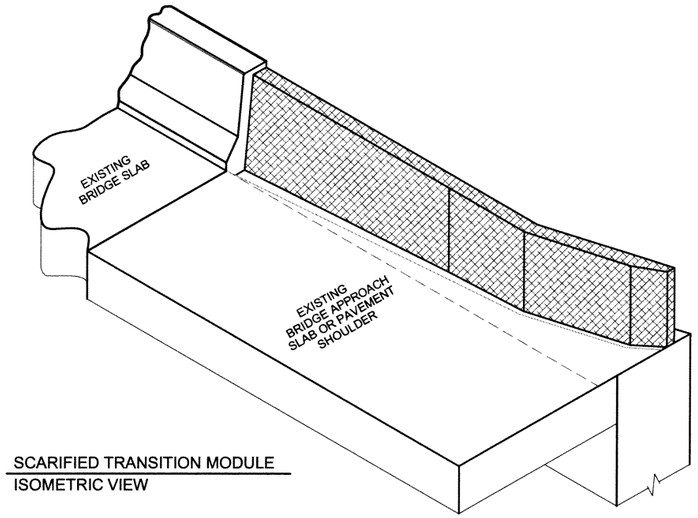

SCARIFIED TRANSITION MODULE
ISOMETRIC VIEW

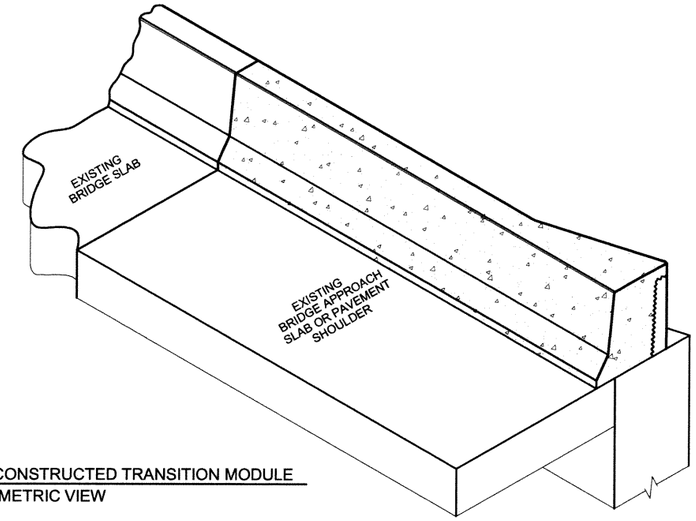

RECONSTRUCTED TRANSITION MODULE
ISOMETRIC VIEW

NOTES:

1. THE STRUCTURAL BONDING AGENT SHALL BE AN EPOXY-CEMENTITIOUS BONDING AGENT AND AN ANTI-CORROSION COATING FOR REINFORCEMENT. THE STRUCTURAL BONDING AGENT SHALL HAVE A MINIMUM BOND STRENGTH (ASTM C 882) OF 2,500 PSI AT 24 HOURS OPEN TIME, A MINIMUM COMPRESSIVE STRENGTH (ASTM C 109) OF 8,000 PSI AT 28 DAYS AND A MINIMUM POT LIFE OF 60 MINUTES.
2. THE EXISTING REINFORCEMENT SHALL NOT BE DAMAGED AND IT SHALL REMAIN DURING THE SCARIFY OF CONCRETE.
3. FOR SCARIFYING THE EXISTING TRANSITION MODULE, THE CONTRACTOR SHALL USE A 15LB MAX. CHIPPING HAMMER. THE CHIPPING HAMMER SHALL BE ELECTRICALLY OR PNEUMATICALLY POWERED.
4. THE RECONSTRUCTION OF TRANSITION MODULE SHALL USE CLASS "A" CONCRETE AS SPECIFIED IN SPEC. 601.
5. THE NEW STEEL REINFORCEMENT SHALL MEET THE REQUIREMENTS OF STANDARD SPECIFICATION 602-"REINFORCING STEEL", EXCEPT THE ARTICLE 602-5.
6. THE EPOXY RESIN ADHESIVE FOR ANCHORS SHALL MEET THE REQUIREMENTS OF AASHTO M235 AND ASTM C881.
7. THE CLASS "A" CONCRETE, NEW STEEL REINFORCEMENT, TRAFFIC PAINT, EPOXY RESIN ADHESIVE FOR ANCHORS, AND STRUCTURAL BONDING AGENT SHALL BE CONSIDERED A SUBSIDIARY OBLIGATION BY THE CONTRACTOR AND ITS COST INCLUDED IN THE "BRIDGE TRANSITION UPGRADE" PAY ITEM.

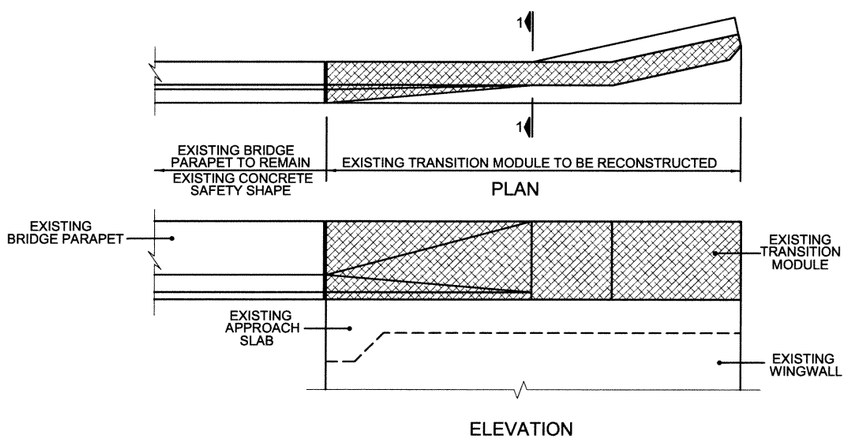

SCARIFIED TRANSITION MODULE DETAILS

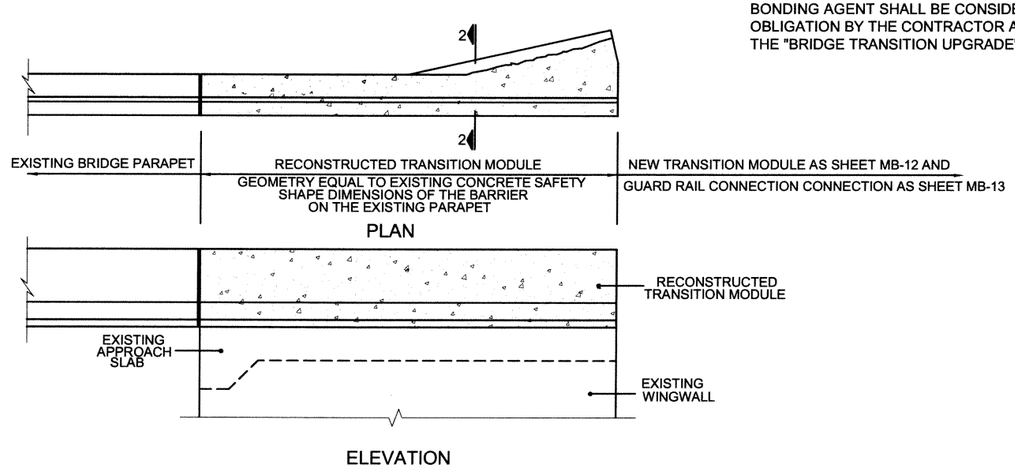

RECONSTRUCTION TRANSITION MODULE DETAILS

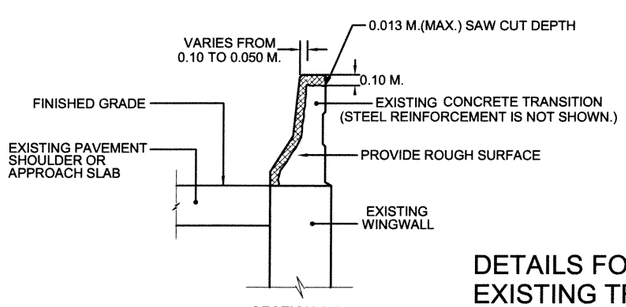

SECTION 1-1
NOT TO SCALE

DETAILS FOR RECONSTRUCTION OF EXISTING TRANSITION MODULE IN APPROACH SLAB CONDITION

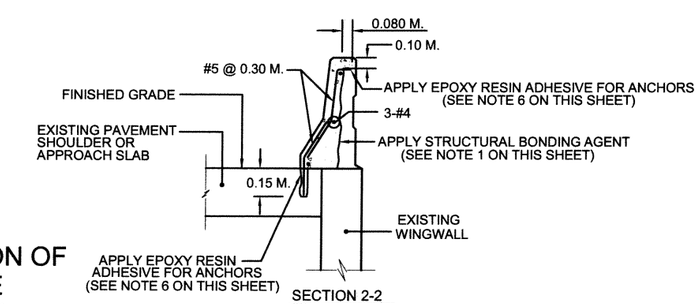

SECTION 2-2
NOT TO SCALE

LEGEND:

- TO BE SCARIFIED
- TO BE EXCAVATED
- NEW CONCRETE CLASS A

ENGINEERING SERVICES AREA
ENGINEERING STANDARDS OFFICE

COMMONWEALTH OF PUERTO RICO DEPARTMENT OF TRANSPORTATION AND PUBLIC WORKS HIGHWAY AND TRANSPORTATION AUTHORITY	22/12/09 DATE:	STANDARD DRAWING APPROVED BY: DEPUTY EXECUTIVE DIRECTOR FOR INFRASTRUCTURE	METAL BARRIER W-BEAM STRONG POST TRANSITION SECTION TO CONCRETE PARAPET EXISTING BRIDGE TRANSITION UPGRADE IN APPROACH SLAB CONDITION

MB-14A

SEPTEMBER 2009