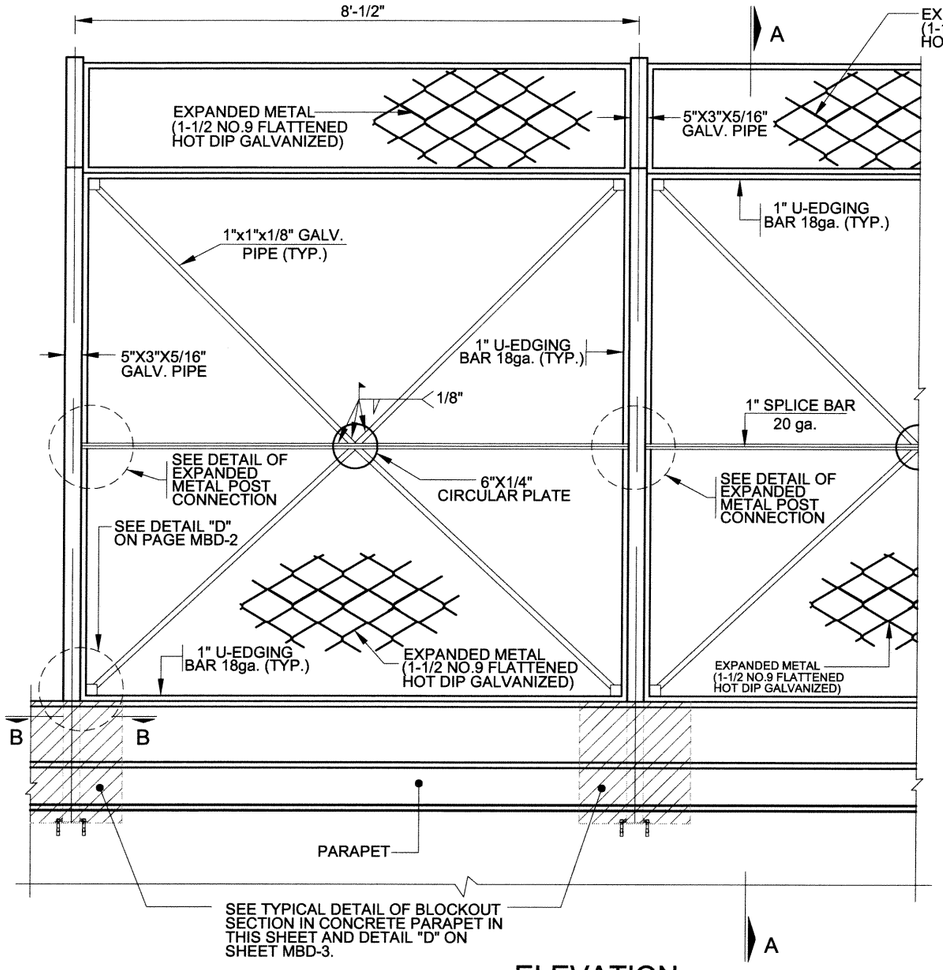

ELEVATION

NOT TO SCALE

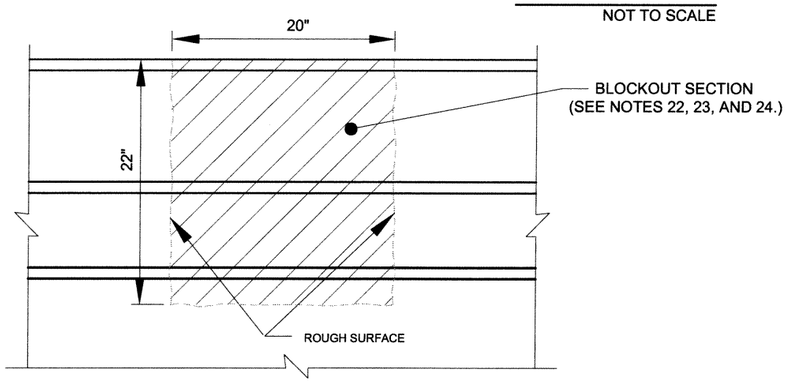

TYPICAL DETAIL OF BLOCKOUT SECTION IN CONCRETE PARAPET

NOT TO SCALE

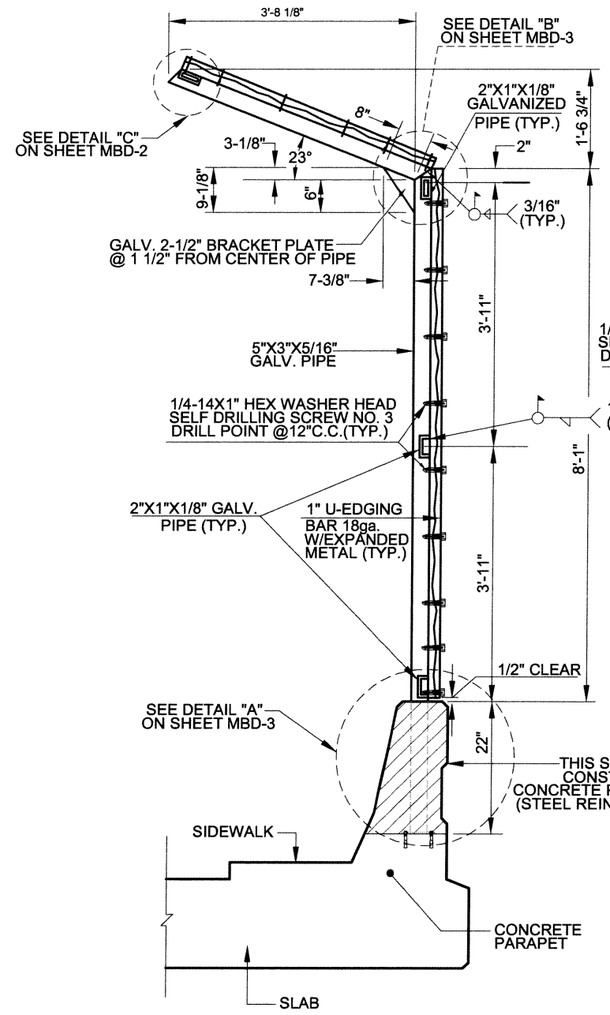

EXPANDED METAL FENCE TYPE 1 SECTION "A-A"

NOT TO SCALE

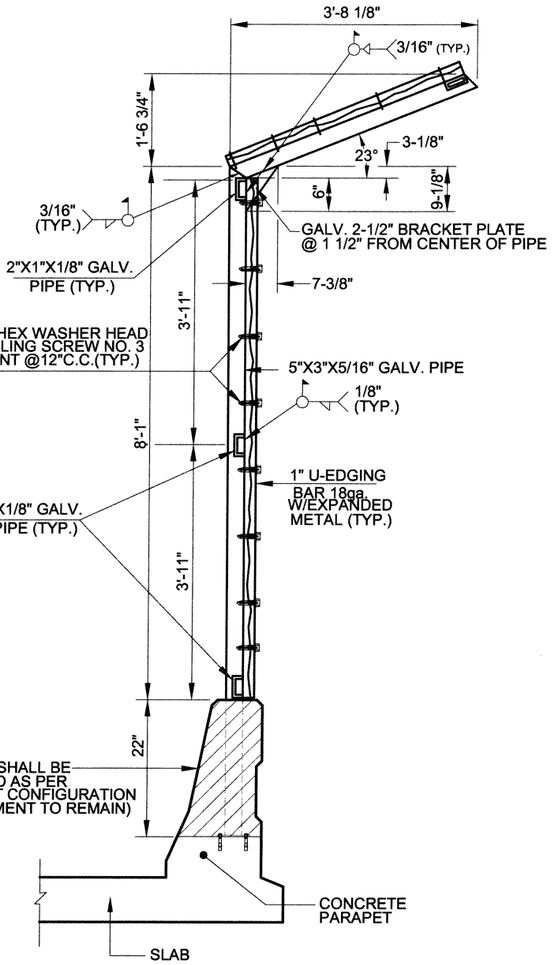

EXPANDED METAL FENCE TYPE 2 SECTION "A-A"

NOT TO SCALE

REVISION	BY	DATE

DWG BY: LMARTINEZ 2934

ENGINEERING STANDARDS OFFICE

ENGINEERING SERVICES AREA

COMMONWEALTH OF PUERTO RICO DEPARTMENT OF TRANSPORTATION AND PUBLIC WORKS HIGHWAY AND TRANSPORTATION AUTHORITY	DATE: 2/11/09	STANDARD DRAWING APPROVED BY: DEPUTY EXECUTIVE DIRECTOR FOR INFRASTRUCTURE	MISCELLANEOUS BRIDGE DETAILS EXPANDED METAL FENCE FOR BRIDGE

MBD-2

SEPTEMBER 2009